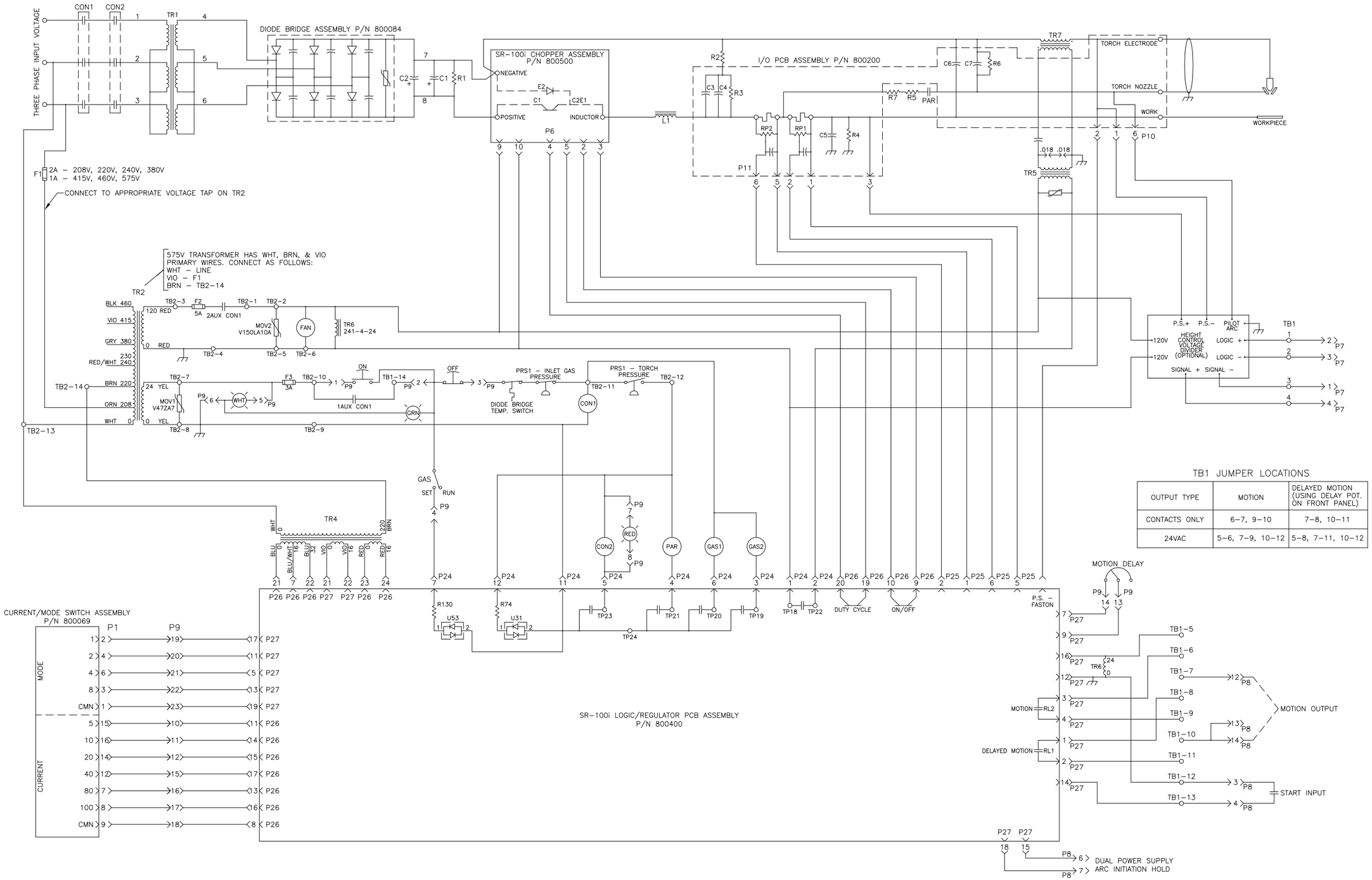

TB1 JUMPER LOCATIONS

OUTPUT TYPE	MOTION	DELAYED MOTION (USING DELAY POT. ON FRONT PANEL)
CONTACTS ONLY	6–7, 9–10	7–8, 10–11
24VAC	5–6, 7–9, 10–12	5–8, 7–11, 10–12

KALIBURN

SCALE: NONE	APPROVED BY:	DRAWN BY: JTH
DATE: 5/17/07		REVISION: 4

SR–100i SYSTEM SCHEMATIC
(208V THREE PHASE SHOWN)

TOLERANCE: .XX .XXX ANGLE	DRAWING NUMBER: 800085